REV	DATE	MODIFICATION DESCRIPTION	CHANGE
A0	2016.5.22	NEW DRAWING	

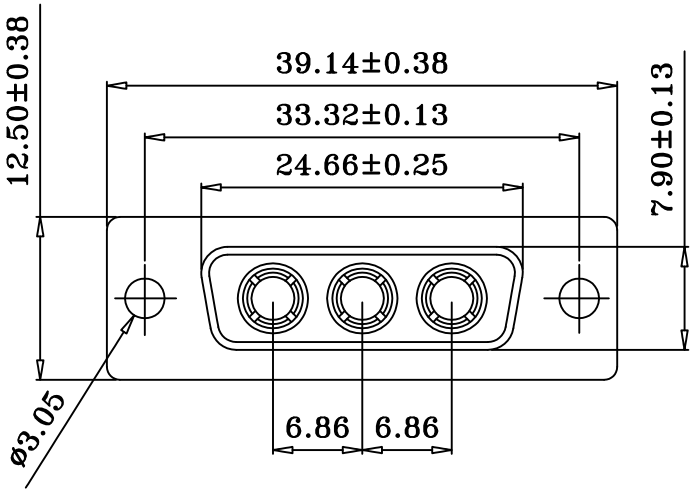

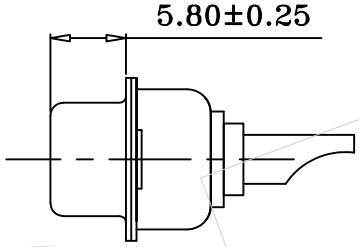

RoHS

MATERIALS AND FINISH

SHELL : STEEL MATERIAL, TIN FINISHED
CONNECTOR INSULATOR : PBT THERMOPLASTIC, 30% GLASS FILLED, UL 94V-0 RATED, BLACK COLOR
HIGH POWER CONTACT MATERIAL: BRASS, 3u" GOLD PLATED

ELECTRICAL CHARACTERISTICS

HIGH POWER CONTACT CURRENT RATING :10,20,OR 40 AMPS
HIGH POWER CONTACT RESISTANCE : 2.7 MILLIOHMS MAX.
DIELECTRIC WITHSTANDING VOLTAGE :
1000 V AC FOR 1 MINUTE
INSULATION RESISTANCE : 5000 MEGAOHMS MIN.
TEMPERATURE RATING : -55°C ~ +125°C

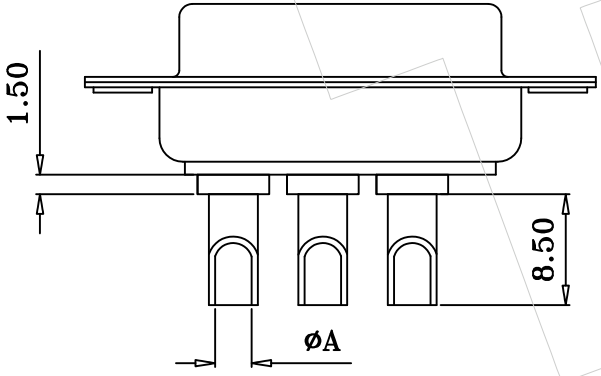

Current Rating	Dimension
	ø A
40 AMPS	ø4.6
30 AMPS	ø3.3
20 AMPS	ø2.8
10 AMPS	ø1.7

Ordering Information

DS- S F 3W3 XX B XX

- Connector Type: F=Female, M=Male
- Contact Plating: G0:Gold Flash, G1:3U" Gold, G2:5U" Gold, G3:10U" Gold, G4:15U" Gold, G5:30U" Gold
- Color: B=Black, U=Blue
- Current Rating: 1=10A, 2=20A, 3=30A, 4=40A

TsingRe
www.tsingre.com
SHENZHEN TSINGRE TECHNOLOGY CO.,LTD

DRAW	David	OPERATION		SCALE	NTS	TITLE: 3W3 Power D-sub connector Female Solder type		
		X.X	±0.30	UNIT	mm	PRODUCT CUSTOMER DRAWING		
CHECK	Anna	X.XX	±0.20	SIZE	A4	PART NO. DS-SF3W3XXBXX	DOC PART 001	REVISION A0
		X.XXX	±0.10					
APPROVE	Hey	Angle	±3°	THRD ANGLE PROJECTION		CUSTOMER PART NO.	CUSTOMER	SHEET NUMBER 1 OF 1
		DIM	TOL					